Body-Solid

Art.-Nr. 1111125

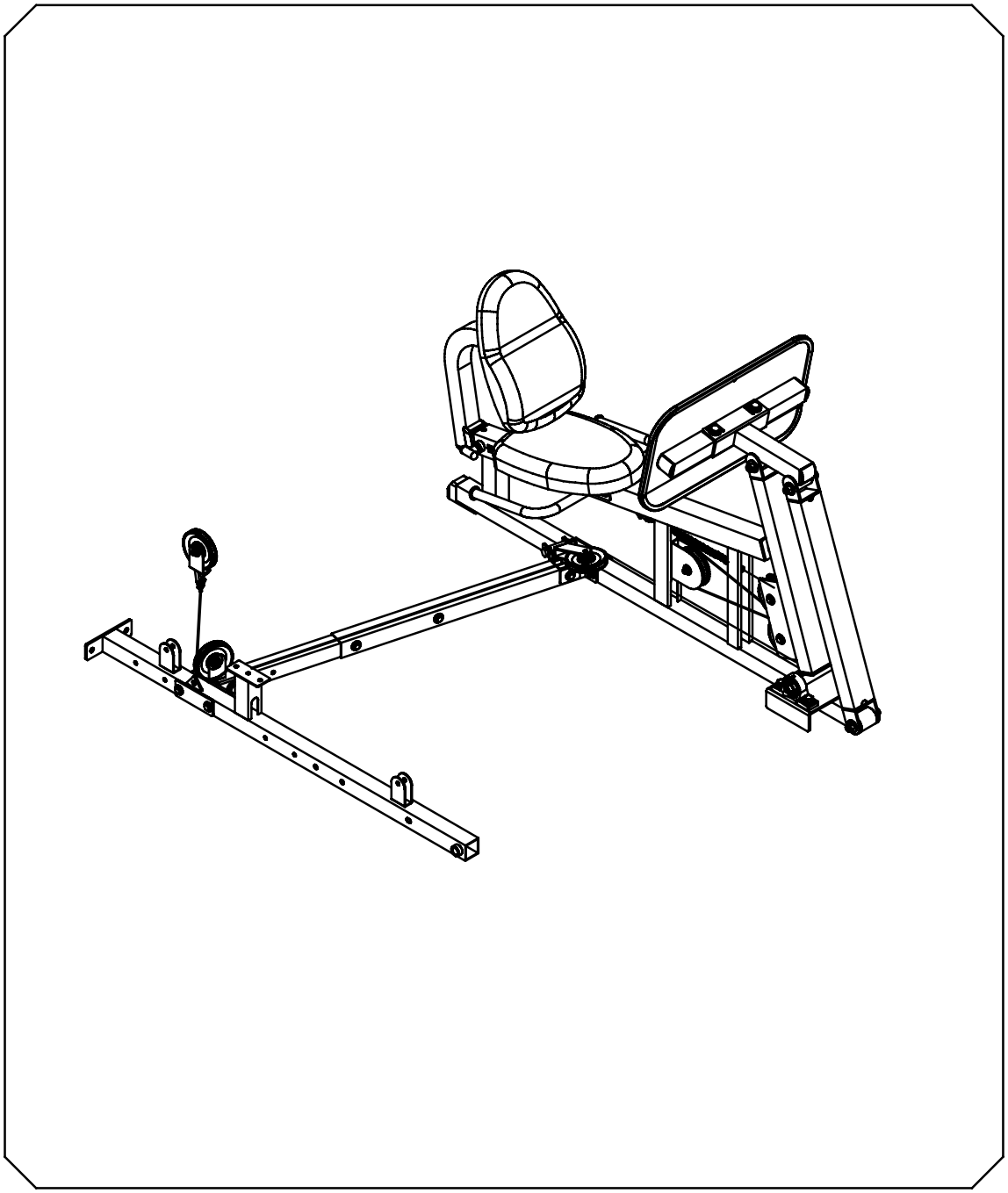

BODY-SOLID,Inc.
1900 S. Des Plaines Ave.
Forest Park, IL 60130 USA
Phone:(708)427-3555
Fax:(708)427-3556
www.bodysolid.com

GLP.1 OWNER'S MANUAL

HARDWARE ILLUSTRATION

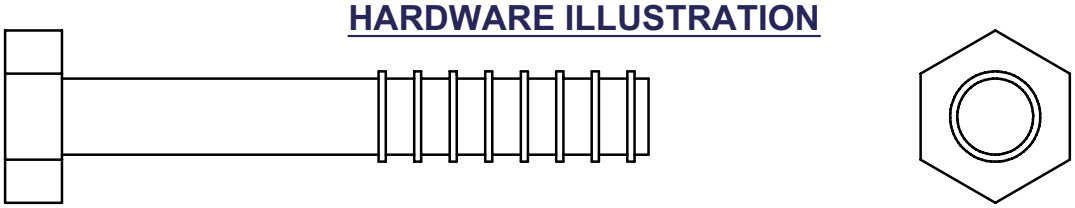

(A1)HEX BOLT 1/2"X3 1/4" PARTIAL THREAD QTY.2

(A2)HEX BOLT 3/8"X1 3/4" PARTIAL THREAD QTY.3

(A3)HEX BOLT 13/8"X2" PARTIAL THREAD QTY.2

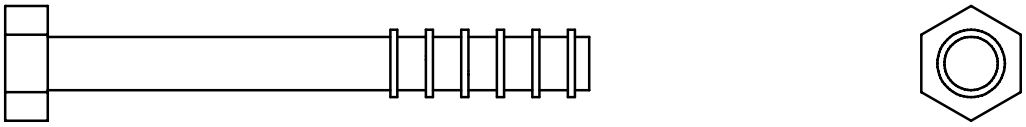

(A4)HEX BOLT 3/8"X3" PARTIAL THREAD QTY.5

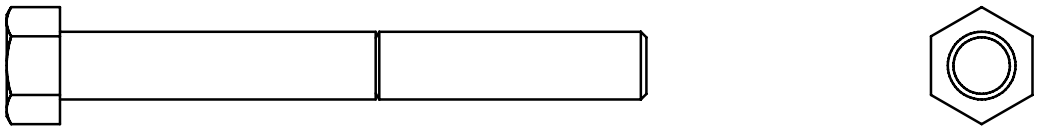

(A5)HEX BOLT 3/8"X3 1/4" PARTIAL THREAD QTY.2

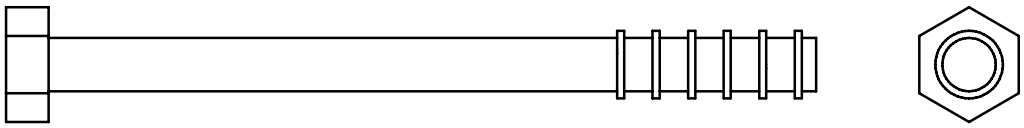

(A7)HEX BOLT 3/8"X4 1/4" PARTIAL THREAD QTY.2

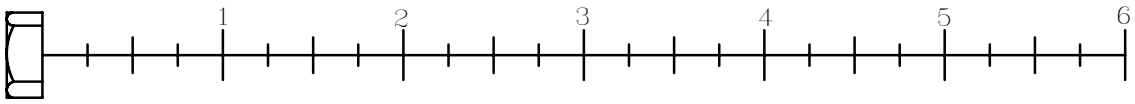

HARDWARE ILLUSTRATION

(A8)HEX BOLT 5/16"X1" PARTIAL THREAD QTY.4

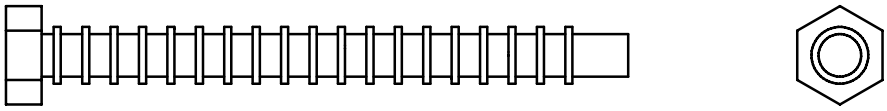

(A9)HEX BOLT 5/16"X3 1/4" PARTIAL THREAD QTY.2

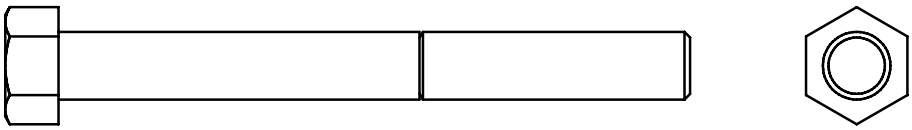

(A10)HEX BOLT 3/8"X2 1/2" PARTIAL THREAD QTY.2

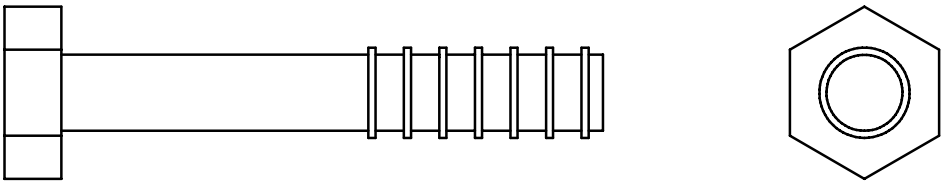

(A11)HEX BOLT 1/2"X3" PARTIAL THREAD QTY.1

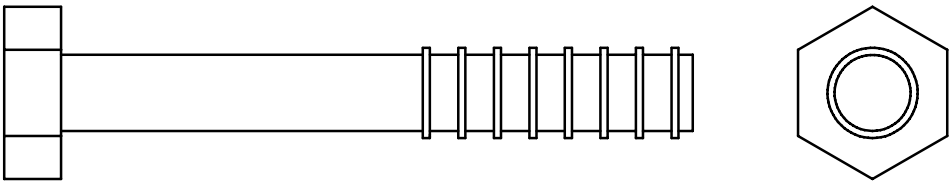

(A12)HEX BOLT 1/2"X3 1/2" PARTIAL THREAD QTY.1

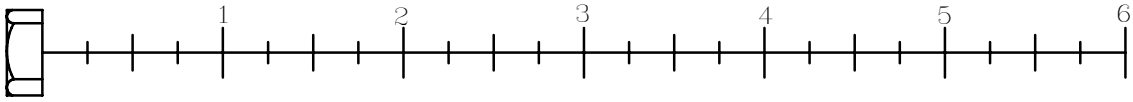

HARDWARE ILLUSTRATION

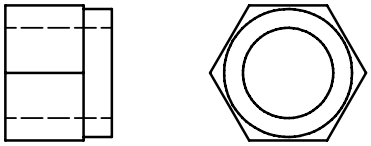

(B1)NYLON LOCK NUT 1/2" QTY.4

(B2)NYLON LOCK NUT 3/8" QTY.16

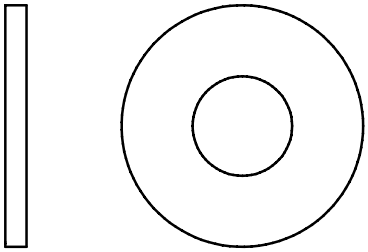

(C1)1/2"(I.D.)FLAT WASHER Ø34 QTY.6

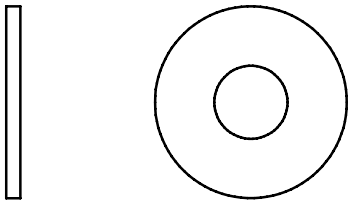

(C2)3/8"(I.D.)FLAT WASHER Ø27 QTY.32

(C3) 5/16"SPRING WASHER QTY.6

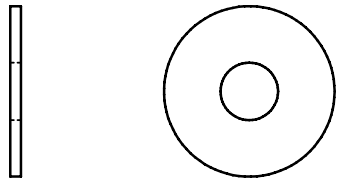

(C4)5/16"(I.D.)FLAT WASHER Ø24 QTY.6

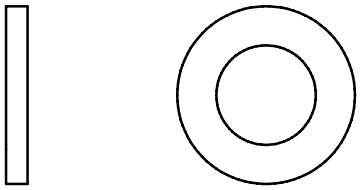

(C5)1/2"(I.D.)FLAT WASHER Ø25 QTY.4

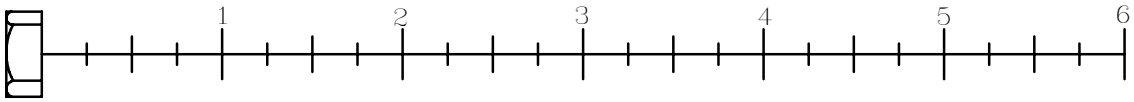

HARDWARE ILLUSTRATION

D1. Ø6 Spring Snap Link (8810-001)----------[1PCS]
D2. □50x2.5T Round End Cap (9211-088)----------[4PCS]
D3. 2"x2" Foot Cap (9211-025)----------[1PCS]
D4. 45X60 Nylon Bushing (9211-047)----------[1PCS]
D6. 45X50 Rubber Dount(9212-039)----------[1PCS]
D7. Ø1 Round End Cap (9260-021)----------[2PCS]
D8. 4205 Steel Cable----------[1PCS]
D9. Ø4 1/4" Pulley(9213-002C)----------[5PCS]

D1

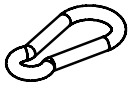

D2

D3

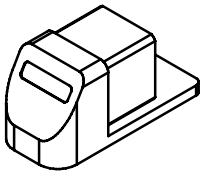

D4

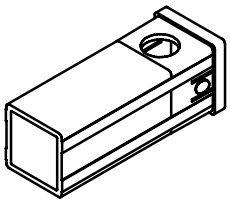

D6

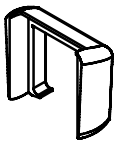

D7

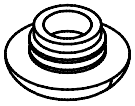

D8

D9

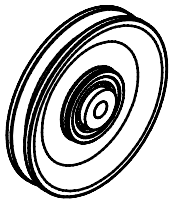

PARTS ILLUSTRATION SHEET

A1[1PCS]

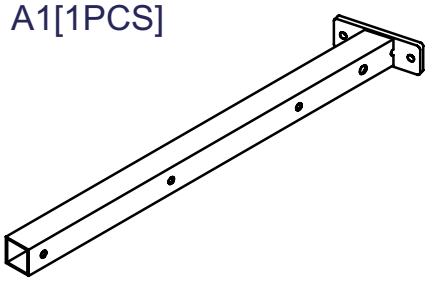

B[1PCS]

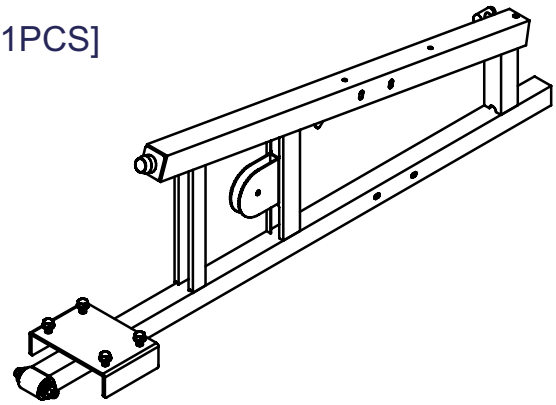

C[1PCS]

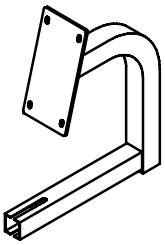

D[1PCS]

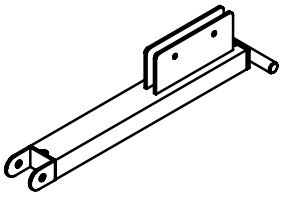

E[1PCS]

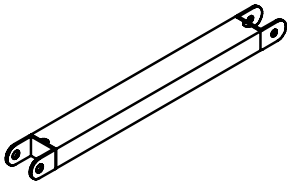

F[1PCS]

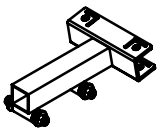

G[1PCS]

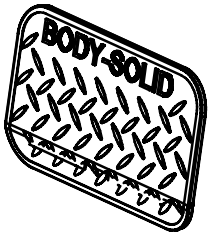

H[2PCS]

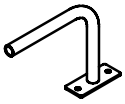

J[2PCS]
8312-090

K[2PCS]
8510-005

L[1PCS]
9121-045

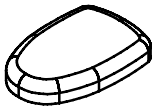

M[1PCS]
9111-049

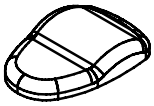

N1[1PCS]

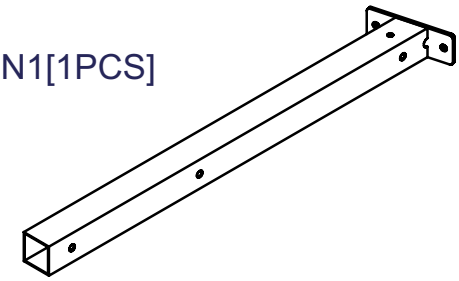

O[1PCS]

P[1PCS]

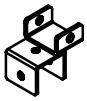

Q[1PCS]

GLP.1-122005

IF Mode A: ☐50X50 Steel Tube
ues A4 Bolt for G2B,G3S,G6B,G5S--(2PCS each)

IF Mode B: ☐50X75 Steel Tube
ues A7 Bolt for G4I,G10B--(2PCS each)

Mode B:50X75 Steel Tube

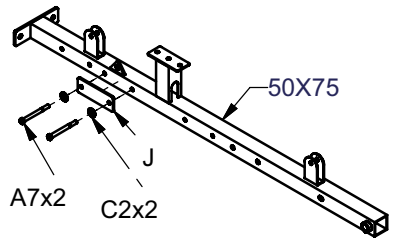

Please adjust the length between A1 to N1
approximately to 1112mm
Suitable TO model:G6B,G5S,G10B

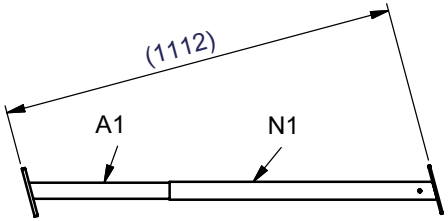

Please adjust the length between A1 to N1
approximately to 862mm
Suitable TO model:G2B,G3S,G4I

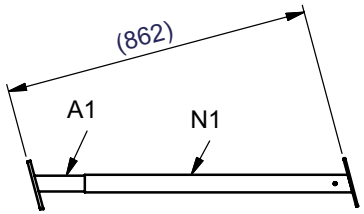

F
5/8"x109L Shaft x2
1/2" Washer x4
1/2" Nylon Lock Nut x4
D2
C
D6
D2
D4
B
A4X2
C2x2
J
D
1/2"x1 3/4" BOLT x4
D3
1/2" WASHERØ25 x4
C2
B2
Kx2
B2x2
C2x2
B2x2
C2x2
A1
C2
B2
J
C2x2
N1
A10x2
C2x2
A4x2
E
1/2" Washer Ø34x2
1/2" Nylon Lock Nut x2
1/2" Nylon Lock Nut x2
1/2" Washer Ø34x2
3/4" Shaft

GLP.1-122005

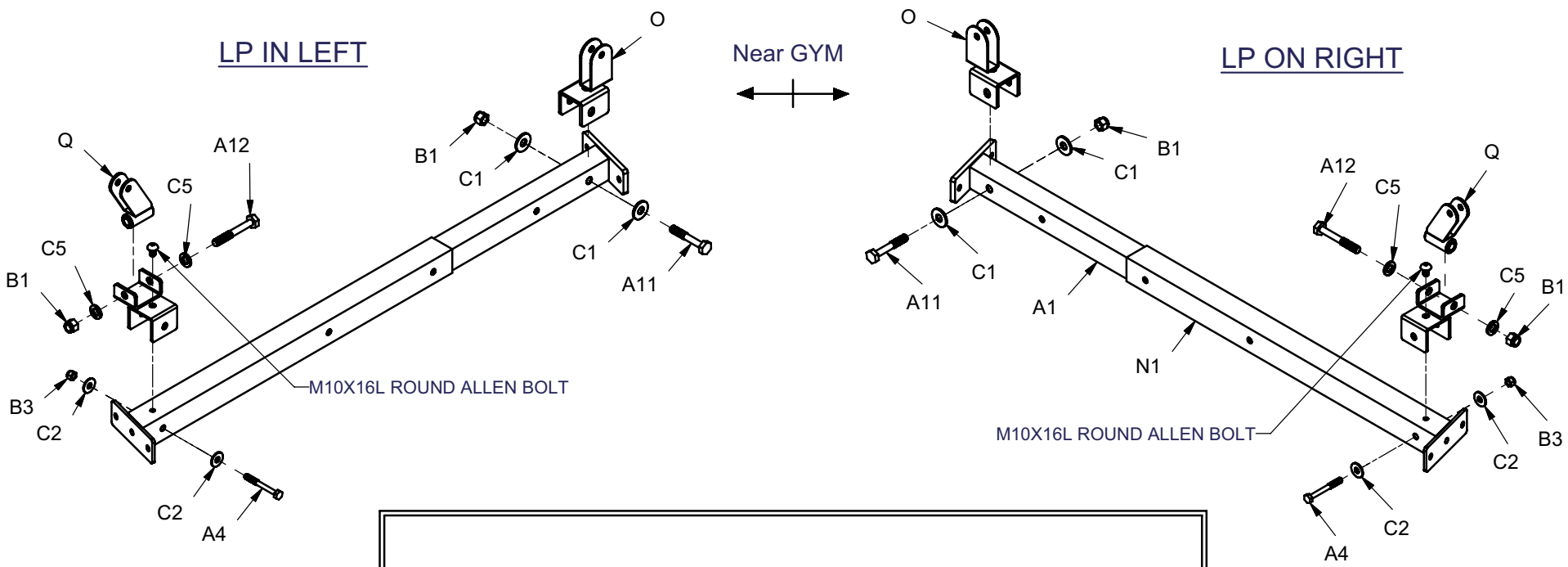
LP IN LEFT
Near GYM
LP ON RIGHT
O
Q
A12
C5
B1
C1
A11
B3
C2
A4
M10X16L ROUND ALLEN BOLT
A1
N1

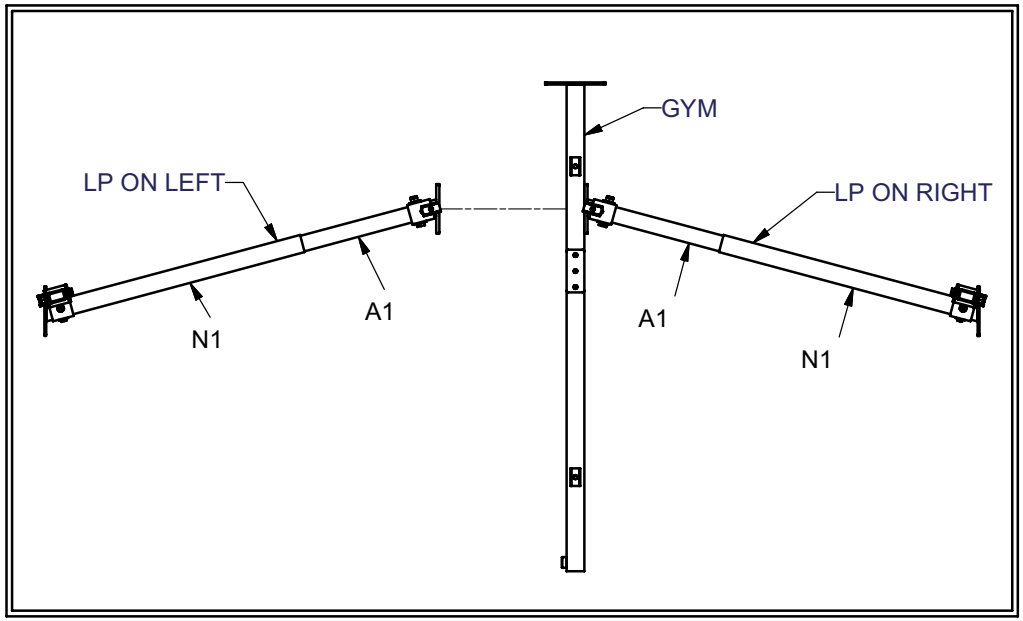
GYM
LP ON LEFT
LP ON RIGHT
A1
N1

GLP.1-122005

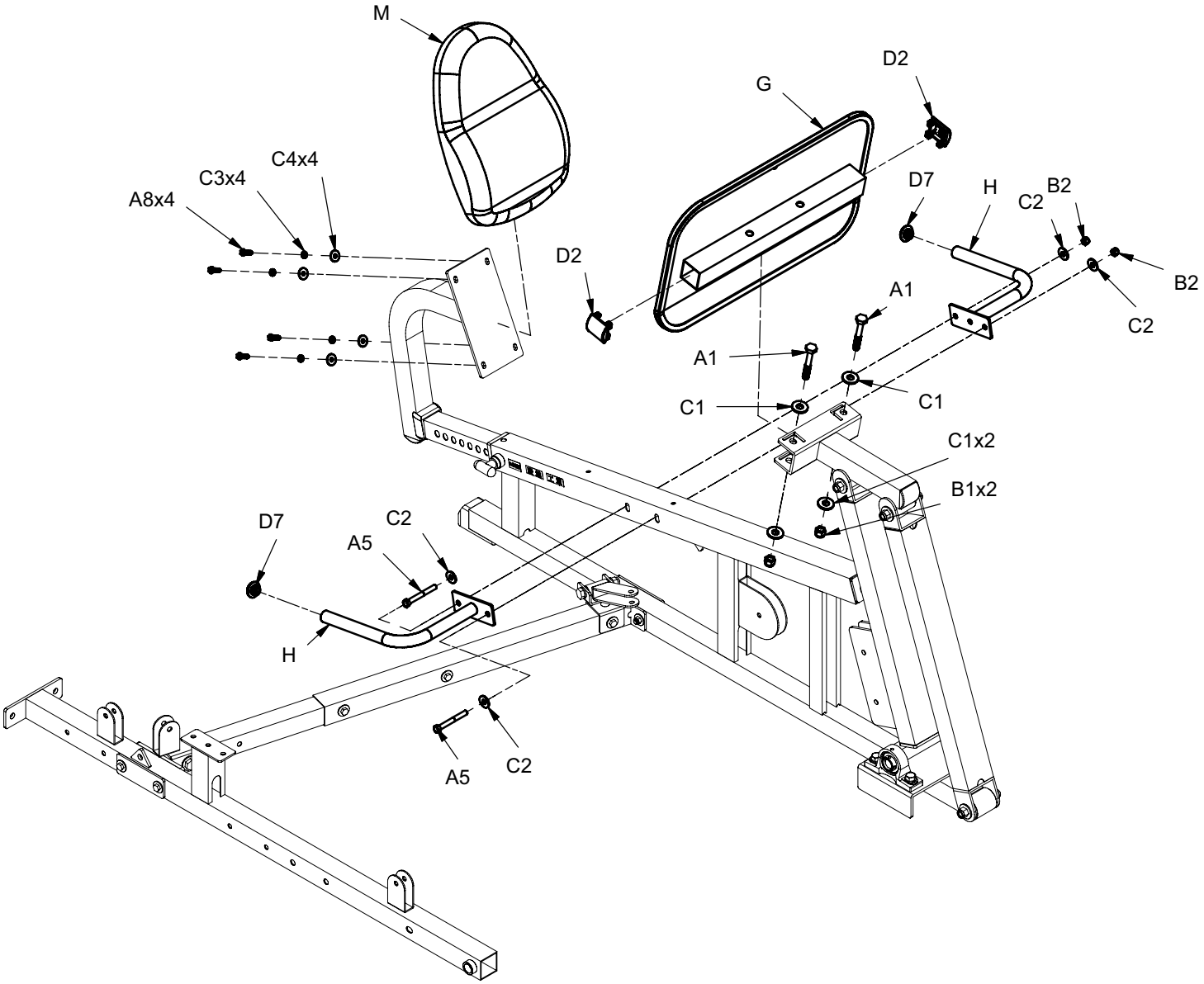
M
G
D2
C4x4
C3x4
A8x4
D7
H
C2
B2
D2
B2
A1
C2
A1
C1
C1
C1x2
B1x2
D7
C2
A5
H
A5
C2

GLP.1-122005

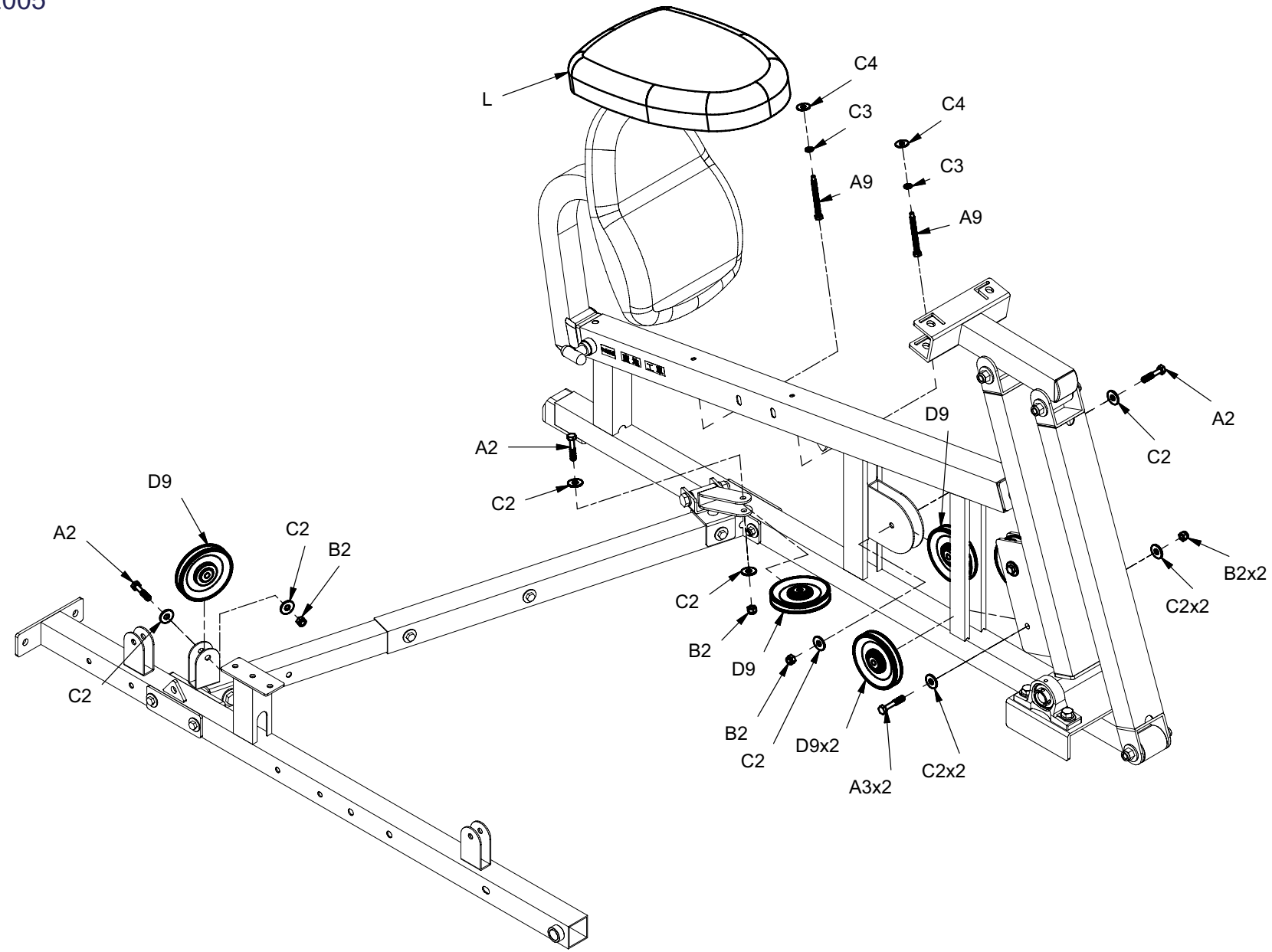
L
C4
C3
A9
C4
C3
A9
A2
C2
D9
A2
C2
D9
A2
C2
B2
C2
B2
D9
B2
C2
D9x2
A3x2
C2x2
B2x2
C2x2

GLP.1-122005

D8

Suitable to model:G2B,G3S,G4I
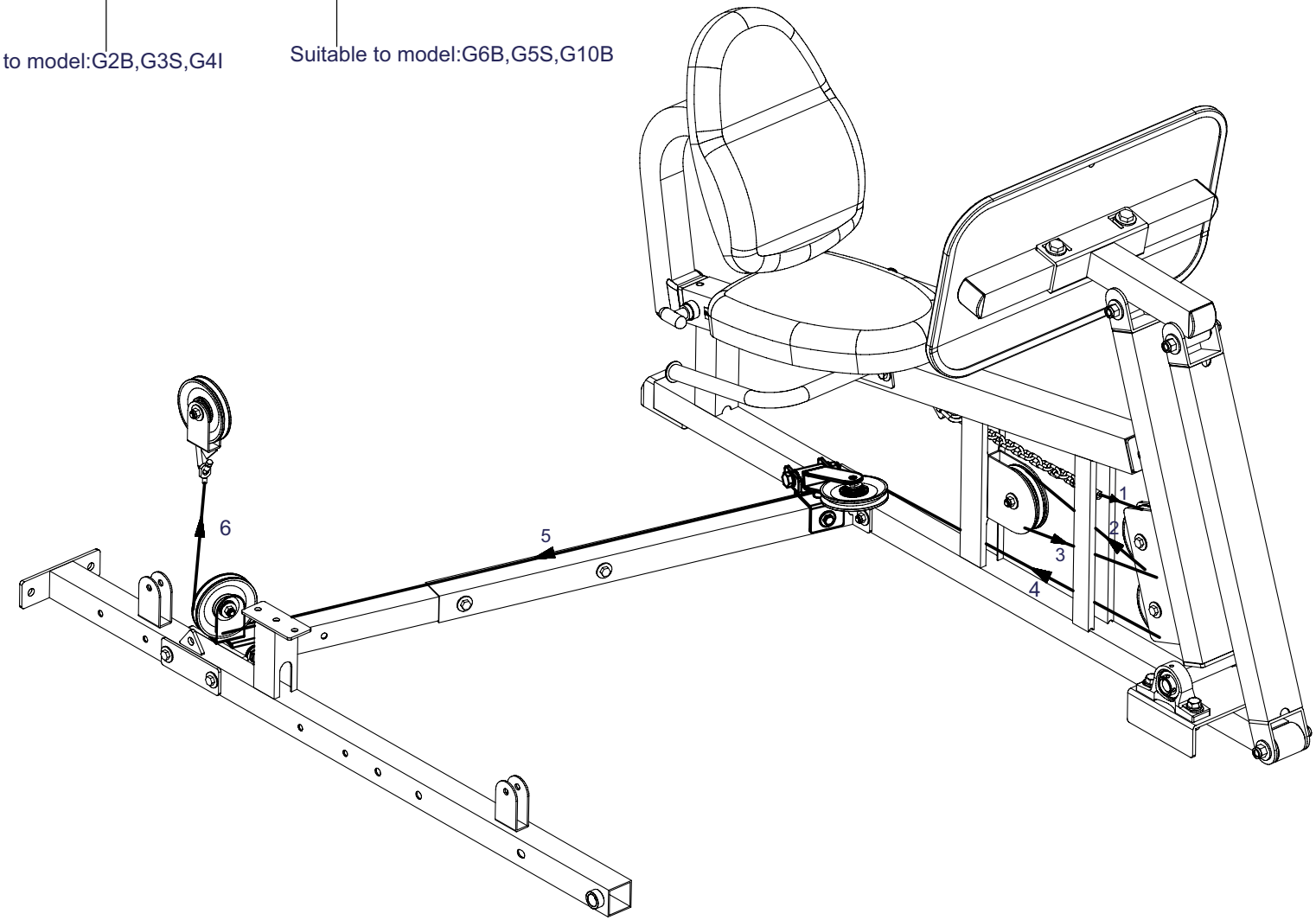
Suitable to model:G6B,G5S,G10B